1B HEAD - FIXED WINDOW EQUAL LEG FRAMING

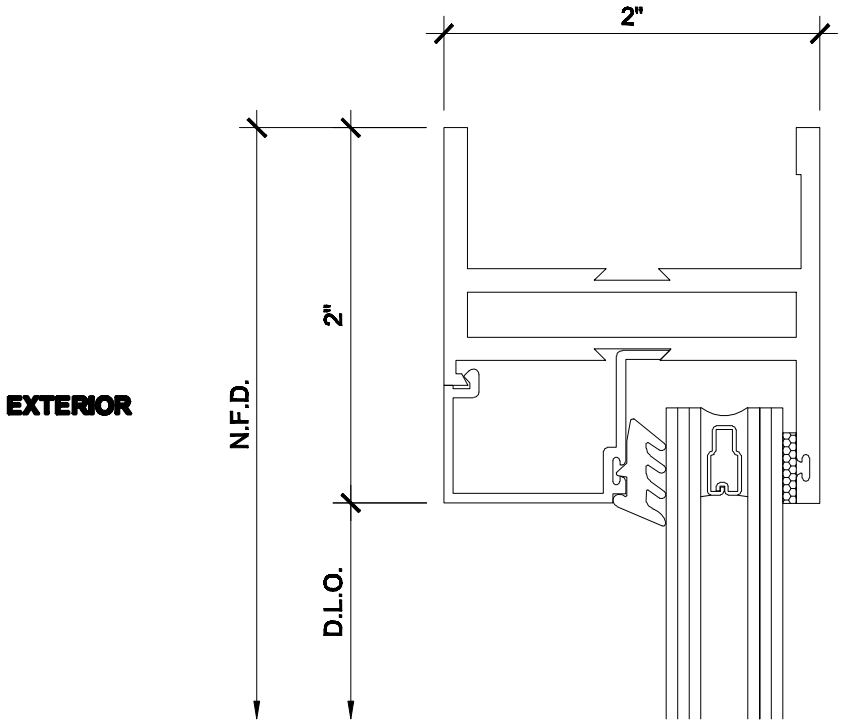

METAL WINDOW CORPORATION

20EHFX1B